OPERATING LAMP

Model: DL-2MB

Order Number: 22.1102

Technical Features

General Features:

Model	: DL-2MB (Mobil Type)
Lamp Features	: LED Lamp
Jointed Arm Features	: Springs Jointed Arm
Classification	: Class I (European Council Directive MDD 93/42 EEC)
Product Documentation	: CE
Standarts	: EN 60601-1, EN 60601-2-41

Electrical Features:

Inlet Voltage	: 220-240 VAC, 50-60 Hz
Total Power Consumption	: 54 W
Electrical Protection Clas	: Class I

Material Properties

Lamp Head Material	: Static Painted(RAL 9002) Aluminium / Polycarbonate
Jointed Arm Material	: Static Painted(RAL 9002) Aluminium
Sterile Arm Material	: Plastic (ABS+PC)
Body Material	: Static Painted(RAL 9002) Sheet

General features	Satellite Lighthead
Diameter of lighthead	: 430 mm
Illumination power, in 1 m	:120.000 lux
Color temperature	: 3500 K - 5000 K
Color rendering index, Ra CRI	: >96
Dimming range	:1 – 100 %
Adjustable focus diameter	:150 mm
surgeaon head area	: < 0,5 °C
Number of LED modules	: 28
Lifetime of LED	: >60.000 hours
Total power consumption	: 55 W
IP	: IP 54
V-The radiation level	: 0,043 W/m2
Center illuminance	: 120,3 klx
Lighting depth	: 77 cm
Scuba center illumination level	:120,4 klx
The radiation levels / light level	: Ee/Ec= 1,41 mW/m2.lx

Sterilization Feature:

The handle should be sterilized at 134 °C between 3,5-5 minutes and at 121°C during 10 minutes
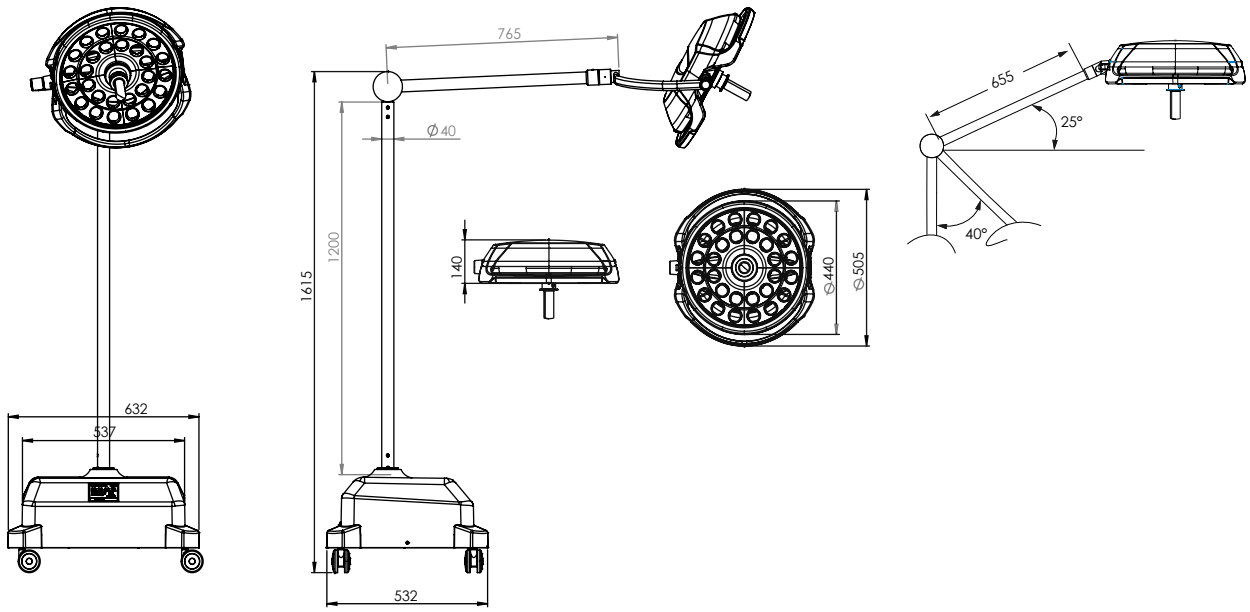
Technical Drawing